A50-45-11

REV. 7/06

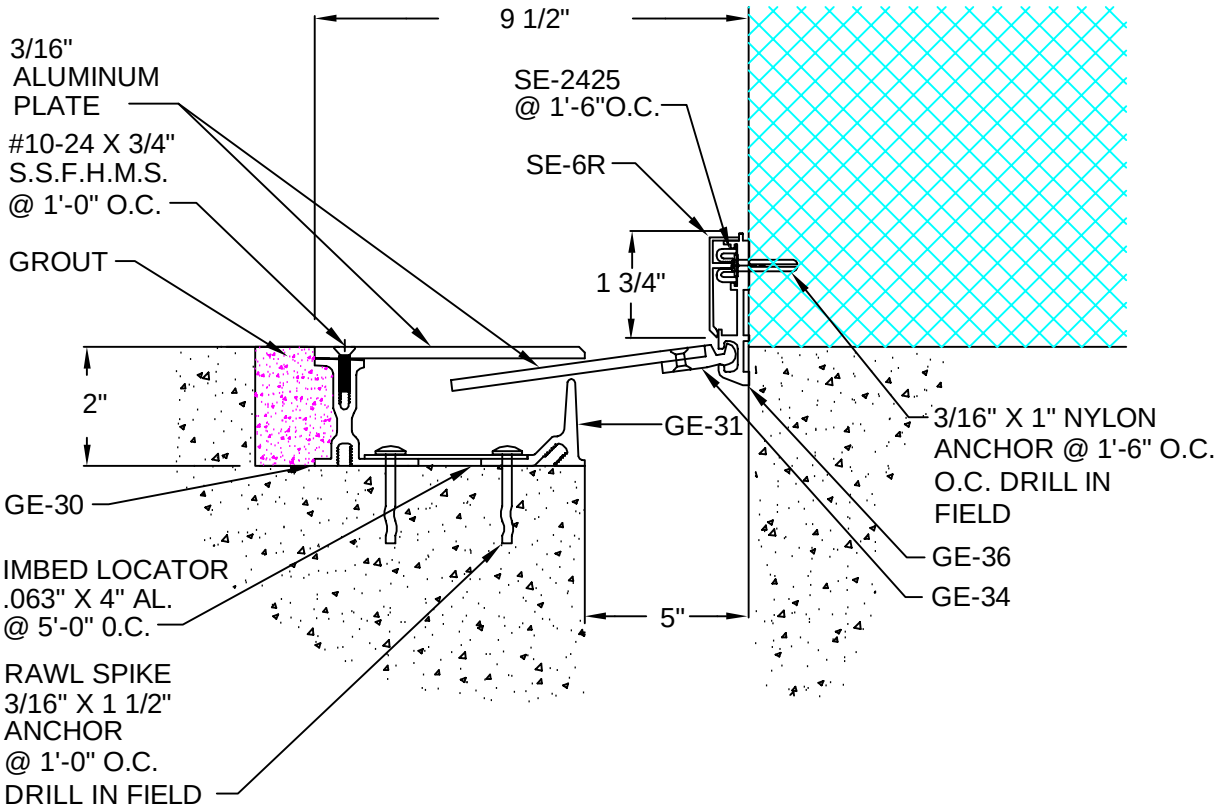

DESCRIPTION: FLOOR-TO-WALL
ALUMINUM: 6063-T5 EXTRUSION, 6061-T6 PLATE
EXPOSED FINISH: MILL
ZINC CHROMATE AREAS IN CONTACT W/ WET CEMENT
ALLOWABLE LOAD: CALL FACTORY: 800-835-0028
MOVEMENT: +/- 25% JOINT WIDTH
STOCK LENGTHS: 10'-0"

CUSTOMER:		
PROJECT:		
LOCATION:		
ARCHITECT:		
CONTRACTOR:		
NOTE:		
JOB NO.:	DATE:	SCALE: (NTS)

LENGTH:	QTY:	COLOR/FINISH:

ARCHITECTURAL ART MFG., INC.
6409 RHODE ISLAND AVE. RIVERDALE, MD 20737

AAMI RESERVES THE RIGHT TO MAKE DESIGN CHANGES, OR TO WITHDRAW ANY DESIGN WITHOUT NOTICE

© COPYRIGHT 2002 AAMI